DRAWING MADE IN THIRD ANGLE PROJECTION

© COPYRIGHT 1964 BY AMP INCORPORATED, HARRISBURG, PA.
ALL INTERNATIONAL RIGHTS RESERVED. AMP INCORPORATED PRODUCTS COVERED BY U. S. AND FOREIGN PATENTS AND/OR PATENTS PENDING.

LOC AF DIST 50

REVISIONS

P	F	ZONE	LTR	DESCRIPTION	DATE	APPROVED
			G	REDRAWN & REVISED A-3943	6/22/78	DSK

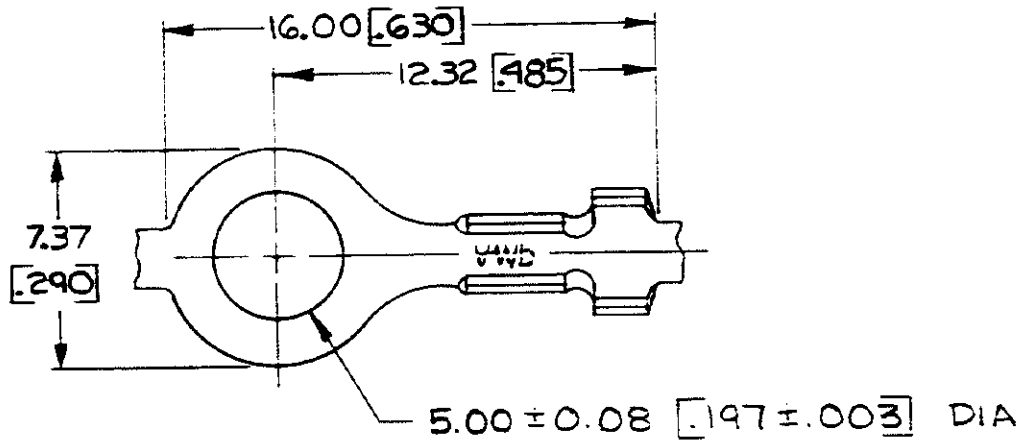

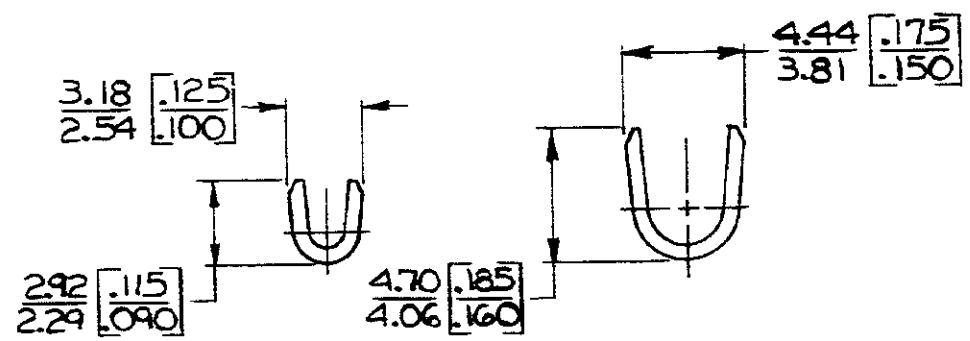

SECT A-A SECT B-B

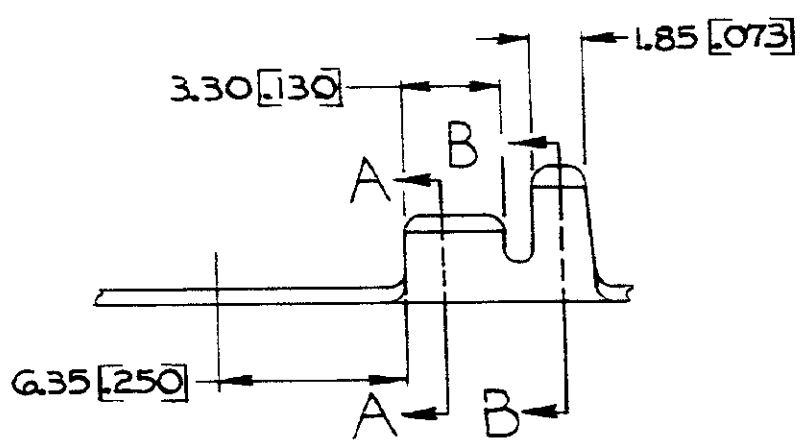

1. CONTINUOUS STRIP, ON REELS
2. DIMENSIONS IN BRACKETS ARE IN INCHES.

STUD SIZE	WIRE RANGE	INSULATION RANGE	FINISH	MATERIAL	PART NO
#10	0.2-0.6 mm² [24-20]	2.03-2.54 [.080-.100]	TIN	O.S. [.020] BRASS	41582

UNLESS OTHERWISE SPECIFIED DIMENSIONS ARE IN [redacted] TOLERANCES ON: DECIMALS ±0.38 [.015] ANGLES ±1°0'

MATERIAL: SEE TABLE

FINISH: SEE TABLE

CONTRACT NO

DR Doughtery 6/22/78

CHK R L Smyers 7-25-78

APPD R R Frantz 8-8-78

APPD E Nichols 8-10-78

DSGN APPD

OTHER APPD

AMP INCORPORATED Harrisburg, Pa.

NAME: RING

SIZE: B | CODE IDENT NO: 00779 | DRAWING NO: 41582

SCALE | SHEET

METRIC

CUSTOMER DRAWING

AMP 1470-15 (7-73)